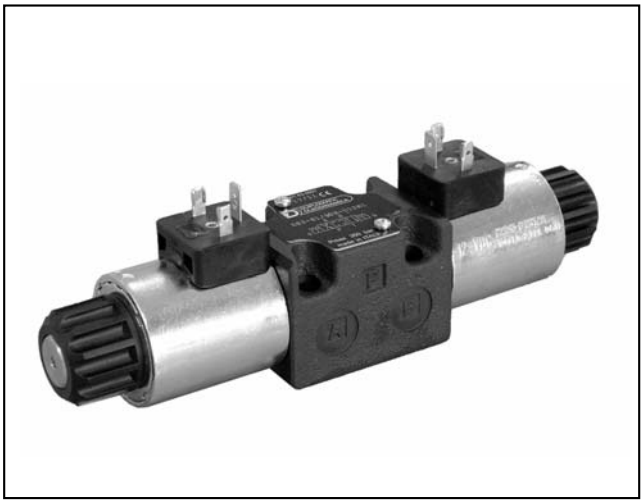

DS3

SOLENOID OPERATED DIRECTIONAL CONTROL VALVE

SUBPLATE MOUNTING
ISO 4401-03 (CETOP 03)

p max **350** bar
Q max **100** l/min

MOUNTING INTERFACE

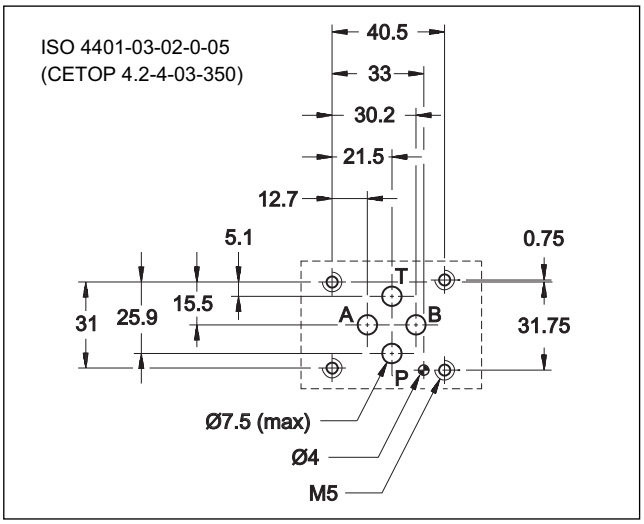

OPERATING PRINCIPLE

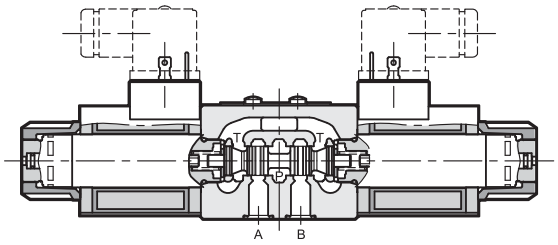

— Direct acting, subplate mounting directional control valve, with mounting surface according to ISO 4401 (CETOP RP121H) standards.

— The valve is supplied with 3 or 4 ways designs, with 2 or 3 positions with a wide range of interchangeable spools.

— The valve body is made with high strength iron castings provided with wide internal passages in order to minimize the flow pressure drop. Wet armature solenoids with interchangeable coils are used (for further information on solenoids see par. 7).

— The valve is available with DC or AC solenoids. DC solenoids can also be fed with AC power supply, by using connectors with a built-in rectifier bridge (see paragraphs 6.4 and 7.2).

— The DC valve is also available in a soft-shifting version (see par. 14).

— Alternative to the standard manual override there are lever, push, boot and mechanical detent devices.

PERFORMANCES (obtained with mineral oil with viscosity of 36 cSt at 50°C)

		CC	CA
Maximum operating pressure: - P - A - B ports - T port	bar	350 210	 160
Maximum flowrate	l/min	100	
Pressure drops Δp-Q	see paragraph 4		
Operating limits	see paragraph 6		
Electrical features	see paragraph 7		
Electrical connections	see paragraph 11		
Ambient temperature range	°C	-20 / +50	
Fluid temperature range	°C	-20 / +80	
Fluid viscosity range	cSt	10 ÷ 400	
Fluid contamination degree	according to ISO 4406:1999 class 20/18/15		
Recommended viscosity	cSt	25	
Mass: single solenoid valve double solenoid valve	kg	1,5 2	1,4 2

1 - IDENTIFICATION CODE

D	S	3	-		/	11		-			/		

Solenoid operated directional control valve

ISO 4401-03 (CETOP 03) size

Spool type (see paragraph 3)

S*	**RSA***	**TA**	**RK**
SA*	**RSB***	**TB**	
SB*		**TA***	
		TB*	

Series:
(the overall and mounting dimensions remain unchanged from 10 to 19)

Seals:
N = NBR seals for mineral oil (**standard**)
V = FPM seals for special fluids

DC power supply

D12 = 12 V
D14 = 14 V
D24 = 24 V
D28 = 28 V
D48 = 48 V
D110 = 110 V
D220 = 220 V
D00 = valve without coils (see **NOTE 1**)

AC power supply

A24 = 24 V - 50 Hz
A48 = 48 V - 50 Hz
A110 = 110 V - 50 Hz / 120 V - 60 Hz
A230 = 230 V - 50 Hz / 240 V - 60 Hz
A00 = valve without coils (see **NOTE**)
F110 = 110 V - 60 Hz
F220 = 220 V - 60 Hz

Option: Surface treatment not standard. Omit if not required
(see **NOTE 2**)

Manual override:
omit for override integrated in the tube (**standard**)
CM = manual override, boot protected
CH = lever manual override (only for DC version)
CP = push manual override (only for DC version)
CK = knob manual override (only for DC version)
CPK = push manual override with mechanical retention (only for DC version)

Coil electrical connection (see par. 11):
K1 = plug for connector type DIN 43650 (**standard**)
K2 = plug for connector type AMP JUNIOR (available on D12 and D24 coils only)
K7 = plug DEUTSCH DT04-2P for male connector type DEUTSCH DT06-2S (available on D12 and D24 coils only)
K12 = plug for M12 connector
K1 coils and DUAL DIN 43560 connector delivered together

NOTE 1 : Coils locking ring and related OR are supplied together with valves.

NOTE 2:The valve is supplied with standard surface treatment of phosphating black. On request we can supply these valves with other surface finishes. Add suffix **/W *** at the end of the code.

W2 = mat epoxy painting black RAL 9005
thickness 20 ÷ 40µ

W4 = gas nitriding and oxidation process black colour

2 - HYDRAULIC FLUIDS

Use mineral oil-based hydraulic fluids HL or HM type, according to ISO 6743-4. For these fluids, use NBR seals (code N).
For fluids HFDR type (phosphate esters) use FPM seals (code V).
For the use of other fluid types such as HFA, HFB, HFC, please consult our technical department.
Using fluids at temperatures higher than 80 °C causes a faster degradation of the fluid and of the seals characteristics.
The fluid must be preserved in its physical and chemical characteristics.

3 - SPOOL TYPE

Type **S***:
2 solenoids - 3 positions
with spring centering

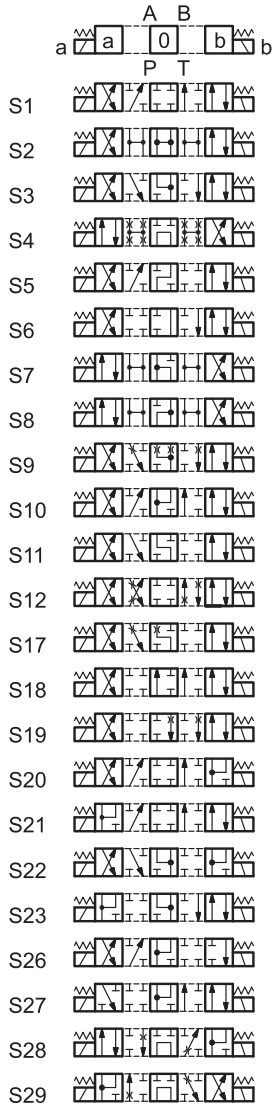

Type **RK**:
2 solenoids - 2 positions
with mechanical retention

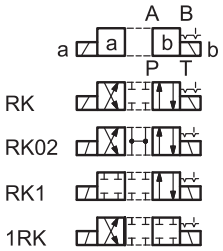

Type **SA***:
1 solenoid side A
2 positions (central + external)
with spring centering

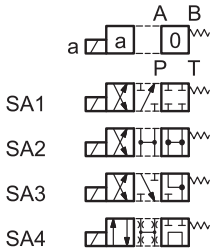

Type **SB***:
1 solenoid side B
2 positions (central + external)
with spring centering

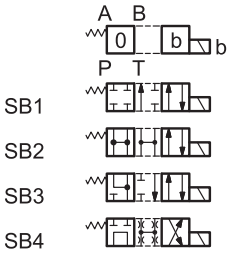

Type **RSA***:
1 solenoid side A
2 positions (external + central)
with return spring

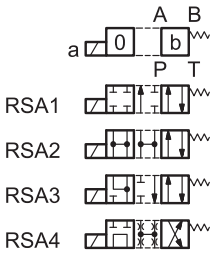

Type **RSB***:
1 solenoid side B
2 positions (external + central)
with return spring

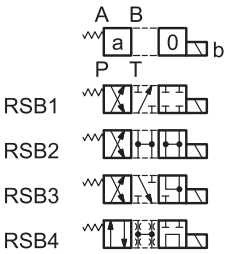

Type **TA**:
1 solenoid side A
2 external positions
with return spring

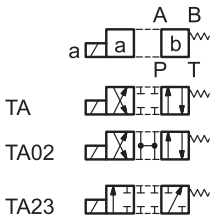

Type **TB**:
1 solenoid side B
2 external positions
with return spring

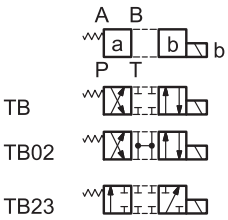

Type **TA***:
1 solenoid side A
2 positions with return spring

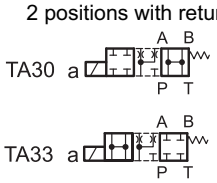

Type **TB***:
1 solenoid side B
2 positions with return spring

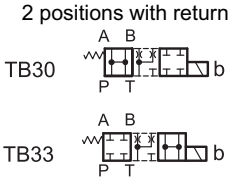

Besides the diagrams shown, which are the most frequently used, other special versions are available: consult our technical department for their identification, feasibility and operating limits.

4 - PRESSURE DROPS Δp-Q (obtained with viscosity 36 cSt at 50 °C)

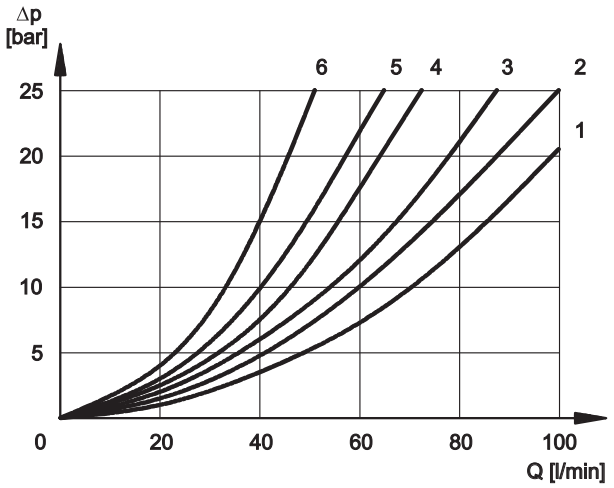

For pressure drops between A and B lines of spools S10, S20, S21, S22 and S23, which are used in the regenerative diagram, refer to curve 5.

PRESSURE DROPS WITH VALVE IN ENERGIZED POSITION

SPOOL TYPE	FLOW DIRECTION			
	P→A	P→B	A→T	B→T
	CURVES ON GRAPH			
S1, SA1, SB1	2	2	3	3
S2, SA2, SB2	1	1	3	3
S3, SA3, SB3, RSA3, RSB3	3	3	1	1
S4, SA4, SB4, RSA4, RSB4	5	5	5	5
S5	2	1	3	3
S6	2	2	3	1
S7, S8	4	5	5	5
S9	2	2	3	3
S10	1	3	1	3
S11	2	2	1	3
S12	2	2	3	3
S17	2	2	3	3
S18	1	2	3	3
S19	2	2	3	3
S20	1	5	2	
S21	5	1		2
S22	1	5	2	
S23	5	1		2
TA, TB	3	3	3	3
TA02, TB02	2	2	2	2
TA23, TB23	3	3		
RK	2	2	2	2
RK02	2	2	2	2
RK1, 1RK	2	2	2	2

PRESSURE DROPS WITH VALVE IN DE-ENERGIZED POSITION

SPOOL TYPE	FLOW DIRECTION				
	P→A	P→B	A→T	B→T	P→T
	CURVES ON GRAPH				
S2, SA2, SB2					2
S3, SA3, SB3, RSA3, RSB3			3	3	
S4, SA4, SB4, RSA4, RSB4					3
S5		4			
S6				3	
S7, S8			6	6	3
S10	3	3			
S11			3		
S18	4				
S22			3	3	
S23			3	3	

5 - SWITCHING TIMES

The values indicated are obtained according to ISO 6403 standard, with mineral oil viscosity 36 cSt at 50°C.

SPOOL TYPE	TIMES	
	ENERGIZING	DE-ENERGIZING
DC	25 ÷ 75 ms	15 ÷ 25 ms
AC	10 ÷ 25 ms	15 ÷ 40 ms

6 - OPERATING LIMITS

The curves define the flow rate operating fields according to the valve pressure of the different versions. The values have been obtained according to ISO 6403 norm with solenoids at rated temperature and supplied with voltage equal to 90% of the nominal voltage. The value have been obtained with mineral oil, viscosity 36 cSt, temperature 50 °C and filtration according to ISO 4406:1999 class 18/16/13.

The limits for TA02 and TA spools refer to the 4-way operation. The operating limits of a 4-way valve in 3-way operation or with port A or B plugged or without flow are shown in the chart on the next page. The performance of the DC solenoid powered by AC with rectifier connectors are at par. 6.4. The performances of the soft-shift valve are shown at par. 14.

6.1 valves in standard operation

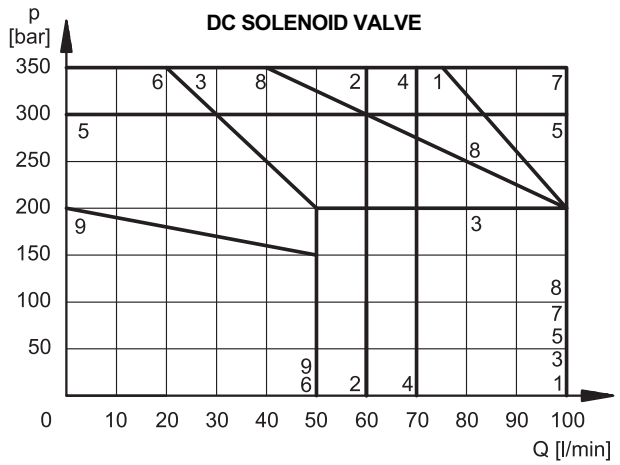

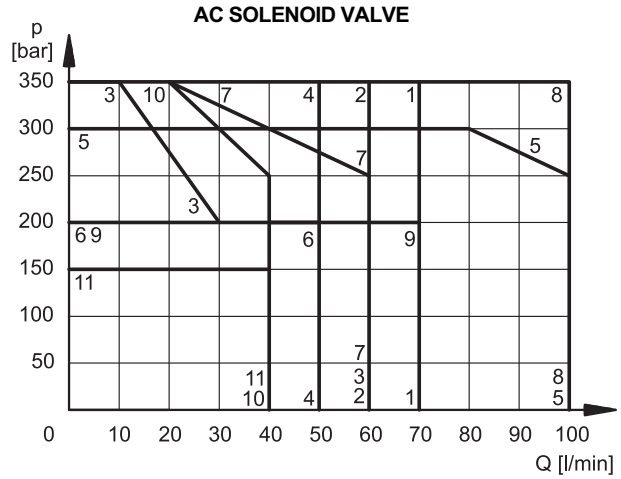

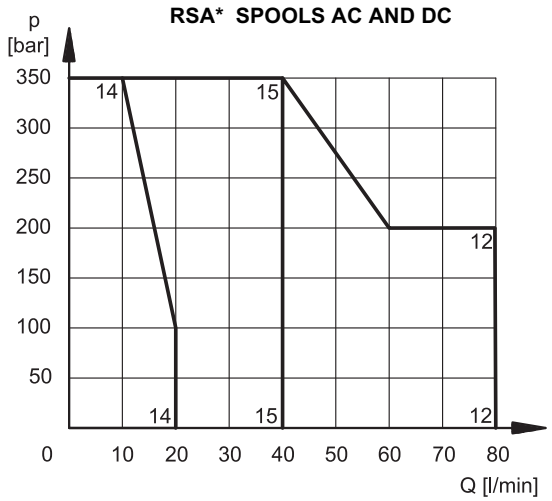

DC SOLENOID VALVE

SPOOL	CURVE	
	P→A	P→B
S1,SA1,SB1	1	1
S2, SA2, SB2	2	2
S3, SA3, SB3	3	3
S4, SA4, SB4	4	4
S5	5	5
S6	4	6
S7	4	4
S8	4	4
S9	7	7
S10	7	7
S11	4	6
S12	1	1
S17	4	4
S18	5	5
S19	4	4
S20	6*	6
S21	6	6*
S22	9*	6
S23	6	9*
TA, TB	7	7
TA02, TB02	8	8
TA23, TB23	2	2
RK	7	7
RK02	8	8
RK1, 1RK	7	7

AC SOLENOID VALVE

SPOOL	CURVE	
	P→A	P→B
S1,SA1,SB1	1	1
S2, SA2, SB2	2	2
S3, SA3, SB3	3	3
S4, SA4, SB4	1	1
S5	5	5
S6	6	6
S7	4	4
S8	4	4
S9	7	7
S10	8	8
S11	6	6
S12	2	2
S17	7	7
S18	5	5
S19	7	7
S20	10*	10
S21	10	10*
S22	10*	10
S23	10	11*
TA, TB	1	1
TA02, TB02	1	1
TA23, TB23	2	2
RK	8	8
RK02	9	9
RK1, 1RK	8	8

* Performance obtained for a valve with A and B lines connected the one to the piston-side chamber and the other to the rod-side chamber of a double-acting cylinder with area ratio 2:1.

SPOOL	CURVE
RSA1	12
RSA2	
RSA3	14
RSA4	15

6.2 4-way valve in 3-way operation

Operating limits of a 4-way valve in 3-way operation or with port A or B plugged or without flow.

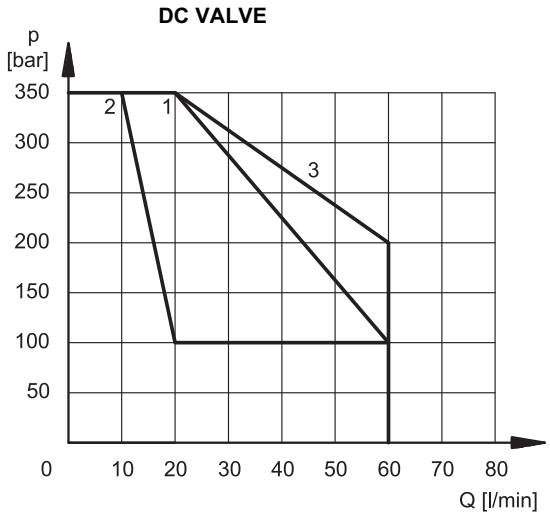

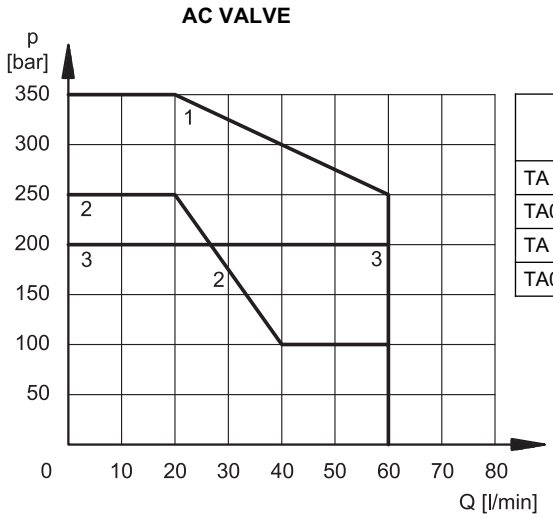

SPOOL	CURVE	
	DC	AC
TA backpr. A	1	1
TA02 backpr. A	1	1
TA backpr. B	2	1
TA02 backpr. B	3	3

6.3 AC solenoid valve with coil A110 fed with 110V - 60 Hz

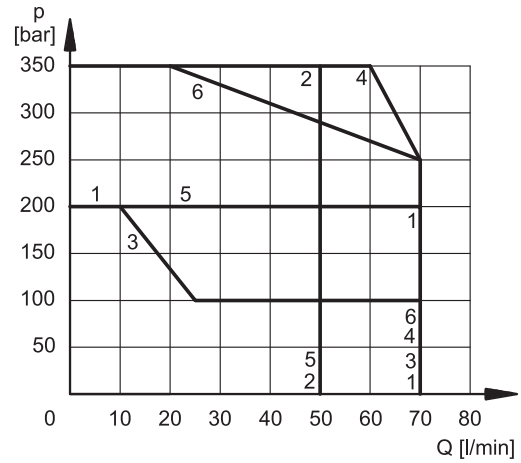

SPOOL	CURVE	
	P→A	P→B
S1,SA1, SB1	1	1
S2, SA2, SB2	2	2
S3, SA3, SB3	3	3
S4, SA4, SB4	4	4
S9	5	5
TA, TB	2	2
RK	6	6

6.4 Operating limits for DC solenoid valves fed with AC with rectifier connectors.

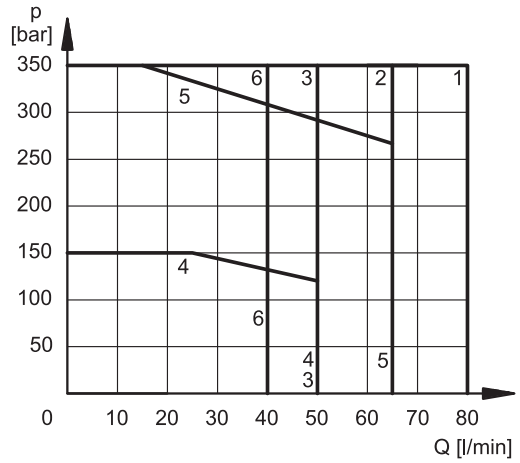

SPOOL	CURVE	
	P→A	P→B
S1, SA1, SB1	2	2
S2, SA2, SB2	3	3
S3, SA3, SB3	4	4
S4, SA4, SB4	2	2
S9	5	5
TA, TB	6	6
RK	1	1

7 - ELECTRICAL FEATURES

7.1 Solenoids

These are essentially made up of two parts: tube and coil. The tube is threaded into the valve body and includes the armature that moves immersed in oil, without wear. The inner part, in contact with the oil in the return line, ensures heat dissipation.

The coil is fastened to the tube by a threaded ring, and can be rotated 360°, to suit the available space.

Protection from atmospheric agents CEI EN 60529

Plug-in type	IP 65	IP 67	IP 69 K
K1 DIN 43650	x (*)		
K2 AMP JUNIOR	x	x (*)	
K7 DEUTSCH DT04 male	x	x	x (*)
K12 DUAL DIN 43650	x	x (*)	

(*) The protection degree is guaranteed only with the connector correctly connected and installed

SUPPLY VOLTAGE FLUCTUATION	± 10% Vnom
MAX SWITCH ON FREQUENCY	18.000 ins/hr
DUTY CYCLE	100%
ELECTROMAGNETIC COMPATIBILITY (EMC) (NOTE)	In compliance with 2004/108/EC
LOW VOLTAGE	In compliance with 2006/95/EC
CLASS OF PROTECTION : Coil insulation (VDE 0580) Impregnation: (DC valve) (AC valve)	 class H class F class H

NOTE: In order to further reduce the emissions, with DC supply, use of type H connectors is recommended. These prevent voltage peaks on opening of the coil supply electrical circuit (see cat. 49 000).

7.2 Current and absorbed power for DC solenoid valve

The table shows current and power consumption values relevant to the different coil types for DC. The rectified current supply takes place by fitting the valve (with the exception of D12 coil) with an alternating current source (50 or 60 Hz), rectified by means of a bridge built-in to the “D” type connectors (see cat. 49 000), by considering a reduction of the operating limits (see diagram at paragraph 6.4).

Coils for direct current (values ±5%)

	Nominal voltage [V]	Resistance at 20°C [Ω]	Current consumpt. [A]	Power consumpt [W]	Coil code K1	K2	K7
D12	12	4,4	2,72	32,7	1903080	1903100	1902940
D14	14	7,2	1.93	27	1903086		
D24	24	18,6	1,29	31	1903081	1903101	1902941
D28	28	26	1,11	31	1903082		
D48	48	78,6	0,61	29,5	1903083		
D110	110	423	0,26	28,2	1903084		
D220	220	1692	0,13	28,2	1903085		

7.3 Current and absorbed power for AC solenoid valve

The table shows current and power consumption values at inrush and at holding, relevant to the different coil types for AC current.

Coils for alternating current (values ± 5%)

Suffix	Nominal Voltage [V]	Freq. [Hz]	Resistance at 20°C [Ω] (±1%)	Current consumption at inrush [A] (±5%)	Current consumption at holding [A] (±5%)	Power consumption at inrush (±5%) [VA]	Power consumption at holding (±5%) [VA]	Coil Code K1 e K12
A24	24	50	1,46	8	2	192	48	1902830
A48	48		5,84	4,4	1,1	204	51	1902831
A110	110V-50Hz 120V-60Hz	50/60	32	1,84	0,46	192	48	1902832
				1,56	0,39	188	47	
A230	230V-50Hz 240V-60Hz		140	0,76	0,19	176	44	1902833
				0,6	0,15	144	36	
F110	110	60	26	1,6	0,4	176	44	1902834
F220	220		106	0,8	0,2	180	45	1902835

8 - OVERALL AND MOUNTING DIMENSIONS FOR DC SOLENOID VALVES

DS3 - S*
DS3 - RK

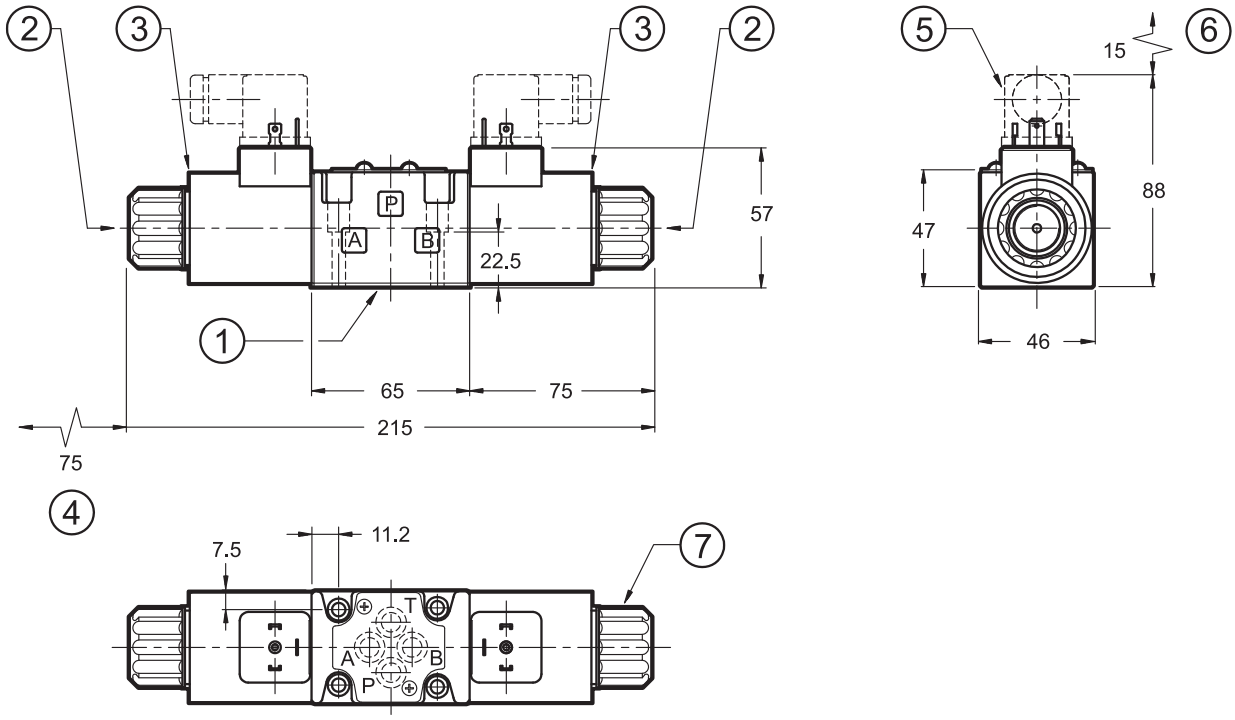

DS3-SA*, DS3-RSA*
DS3-TA, DS3-TA*

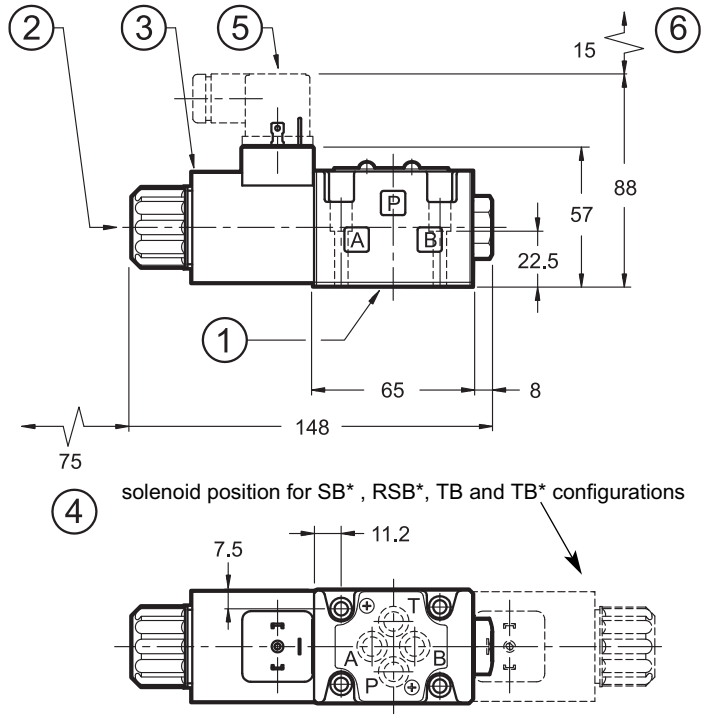

dimensions in mm

1	Mounting surface with sealing rings
2	Standard manual override included in the solenoid tube
3	Coil (360° revolving)
4	Coil removal space
5	DIN 43650 connector (standard K1 shown) to be ordered separately (see cat. 49 000)
6	Connector removal space
7	Locking ring: tightening torque 5 ±0.5 Nm

See par. 16 and 17 for fastening bolts and sealing rings

9 - OVERALL AND MOUNTING DIMENSIONS FOR AC SOLENOIDS VALVES

DS3 - S*
DS3 - RK

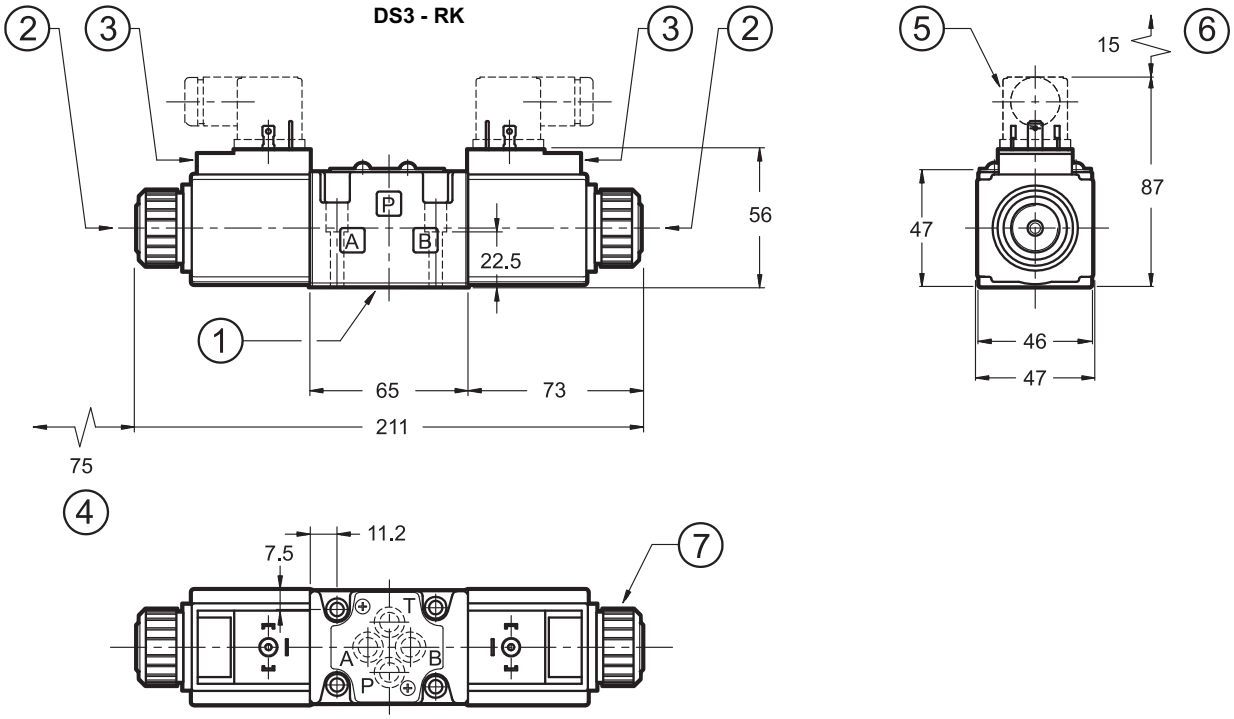

DS3-SA*, DS3-RSA*
DS3-TA, DS3-TA*

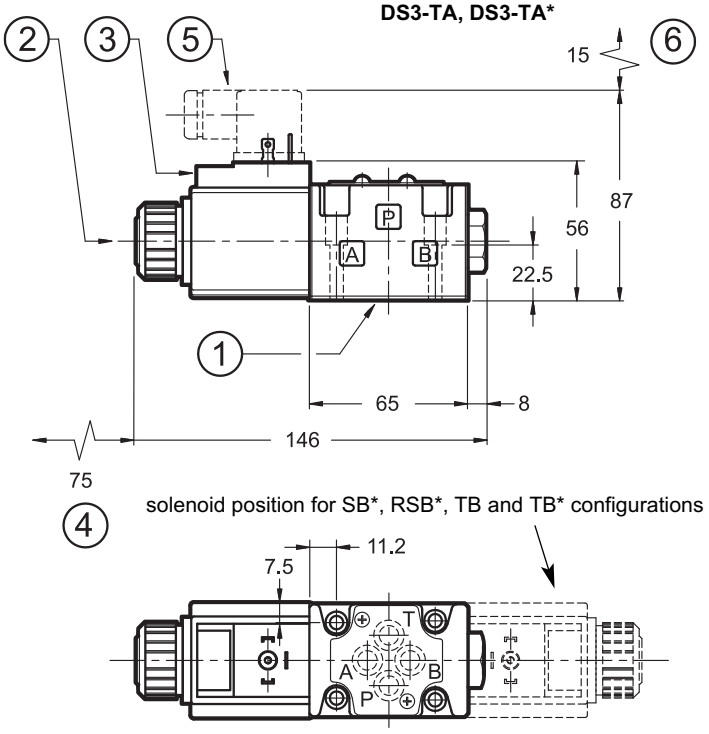

dimensions in mm

1	Mounting surface with sealing rings
2	Standard manual override included in the solenoid tube
3	Coil (90° revolving)
4	Coil removal space
5	DIN 43650 connector to be ordered separately (see cat. 49 000)
6	Connector removal space
7	Locking ring: tightening torque 5 ±0.5 Nm

See par. 16 and 17 for fastening bolts and sealing rings

10 - INSTALLATION

Configurations with centering and return springs can be mounted in any position; type RK valves - without springs and with mechanical detent - must be mounted with the longitudinal axis horizontal. Valve fixing takes place by means of screws or tie rods, with the valve mounted on a lapped surface, with values of planarity and smoothness that are equal to or better than those indicated in the drawing. If the minimum values of planarity and/or smoothness are not met, fluid leakages between valve and mounting surface can easily occur.

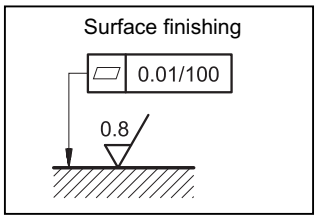

11 - ELECTRIC CONNECTIONS

connection for DIN 43650 connector type
code **K1** (**standard**)

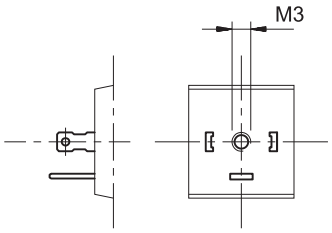

connection for AMP JUNIOR connector type
code **K2**

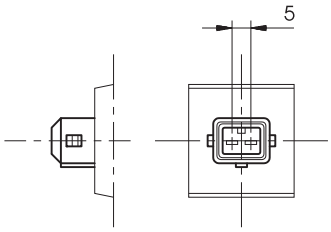

connection for
DEUTSCH DT06-2S male connector type
code **K7**

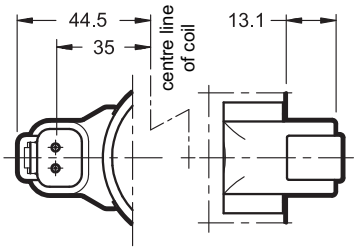

connection for
DUAL DIN 43650 connector type
code **K12**

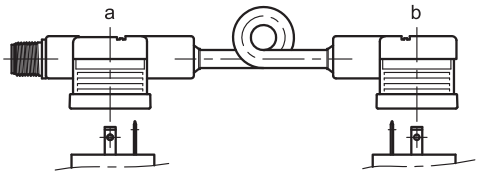

CONNECTOR M12x1 CONNECTION SCHEME

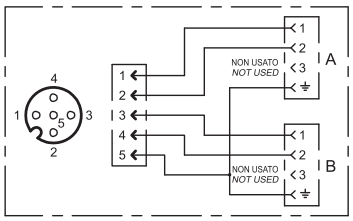

In K12 version the valve will be delivered together with the connector DUAL DIN 43650 with M12 connection already mounted on K1 coils. DUAL DIN connector allows to power two solenoids with a single cable with socket M12.

12 - ELECTRIC CONNECTORS

The solenoid operated valves are delivered without connector, except the version K12, where the connector is delivered together with the valve. For coils with standard electrical connections K1 type (DIN 43650) the connectors can be ordered separately. For the identification of the connector type to be ordered please see cat. 49 000. For K2 and K7 connection type the relative connectors are not available.

13 - MANUAL OVERRIDES

13.1 - Manual override, boot protected

CM-DS3/11 - Version for DC solenoid valve

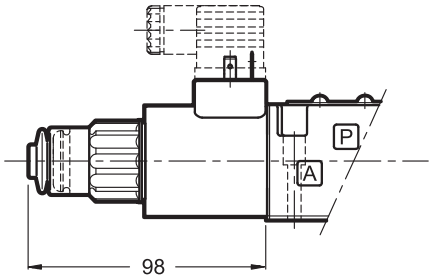

Code: 3401150006

Version for AC solenoid valve

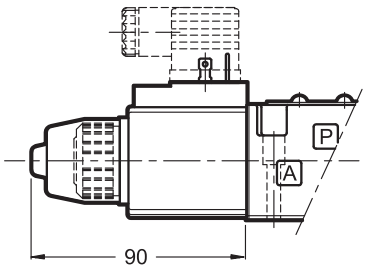

Code: 0269201

13.2 - CH-DS3/10 Lever manual override (only for DC solenoid valve)

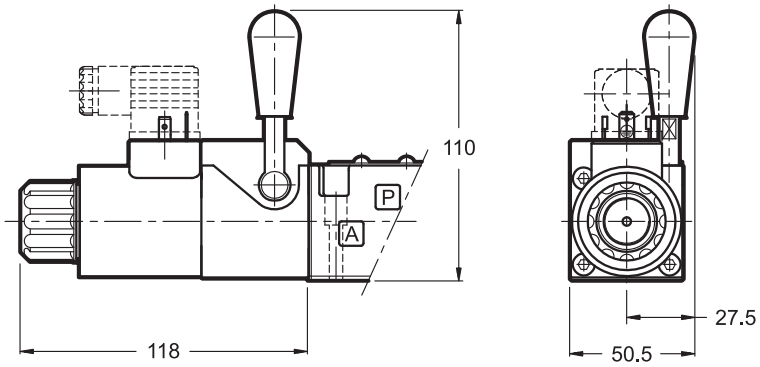

13.3 - CP-DS3/10 Push manual override (only for DC solenoid valve)

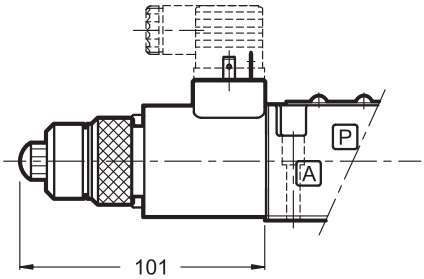

Code: 3401150005

13.4 - CK-DS3/10 Knob manual override (only for DC solenoid valve)

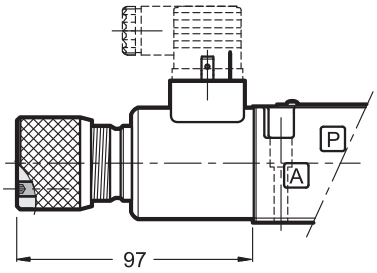

When the set screw is screwed and its point is aligned with the edge of the knob, tighten the knob till it touches the spool: in this position the override is not engaged and the valve is de-energized. After adjusting the override, tighten the set screw in order to avoid the knob loosing.

Spanner: 3 mm

Code: 3401150009

13.5 - CPK-DS3/10 Push manual override with mechanical retention (only for DC solenoid valve)

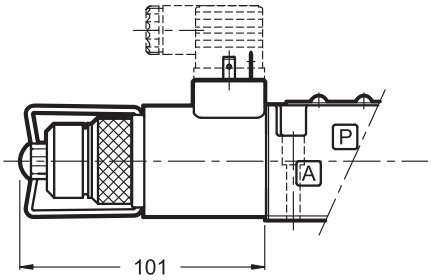

Code: 3401150004

14 - SOFT-SHIFTING VERSIONS FOR DC SOLENOID VALVE

Identification code

D S 3 - ___ / 13 ___ - ___ ___ / F ___ ___

Solenoid operated directional control valve

ISO 4401-03 (CETOP 03) size

Spool type

S1 **TA12**
S2F **TB12**
S4F **TA23**
S9 **TB23**
S12

Series:
(the overall and mounting dimensions remain unchanged from 10 to 19)

Seals:
N = NBR seals for mineral oil (**standard**)
V = FPM seals for special fluids

NOTE :The valve is supplied with standard surface treatment of phosphating black. On request we can supply these valves with other surface finishes. Add suffix **/W*** at the end of the code.

W2 = mat epoxy painting black RAL 9005 thickness 20 ÷ 40µ

W4 = gas nitriding and oxidation process black colour

Coil type

D12 = 12 V
D24 = 24 V
D28 = 28 V
D110 = 110 V
D220 = 220 V

Coil electrical connection (see par. 11):

K1 = plug for connector type DIN 43650 (**standard**)

K2 = plug for connector type AMP JUNIOR (available on D12 and D24 coils only)

K7 = plug DEUTSCH DT04-2P for male connector type DEUTSCH DT06-2S (available on D12 and D24 coils only)

K12 = plug for M12 connector K1 coils and DUAL DIN 43560 connector delivered together

Soft-shifting

Manual override (see par.1 and 13)

Option: non-standard surface treatment. Omit if not required (see **NOTE**)

This version enables hydraulic actuators to perform a smooth start and stop by reducing the speed of movement of the valve spool.

The diagram on the side shows the operating limits of the spools available in the soft-shifting version (**NOTE**: for this version, the S9 spool must be used instead of the S3 one).

The table on the side shows the switching times. The values indicated are obtained according to ISO 6403 standard, with mineral oil viscosity 36 cSt at 50°C.

The shifting time and characteristics curves, are influenced by the viscosity (and thus by the temperature) of the operating fluid. Moreover, times can vary according to the flow rate and operating pressure values of the valve.

For the correct functioning of the soft-shifting, ensure that the solenoid tubes are always filled with oil. For this purpose, we recommend to install a backpressure valve set at 1 ÷ 2 bar on T line.

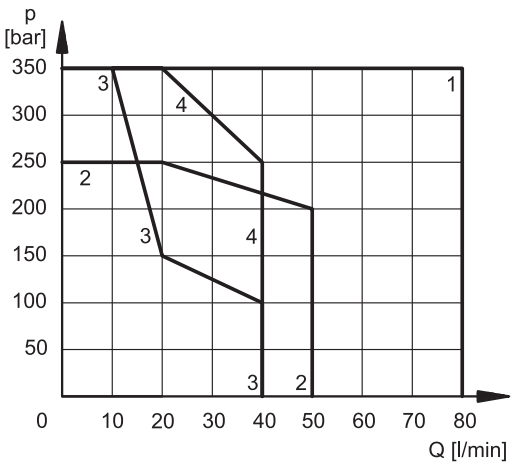

SPOOL	CURVE	TIMES [ms]	
		ENERGIZING	DE-ENERGIZING
S1, S12	1	350	200 ÷ 300
S2F	2	400	100 ÷ 250
S4F	4	350	150 ÷ 300
S9	1	400	200 ÷ 300
TA12, TB12	3	180	200 ÷ 300
TA23, TB23		300	200 ÷ 300

15 - PORT RESTRICTOR PLUGS

Port restrictor plugs are recommended for restricting when flows can occur during the switching processes, which exceed the performance limit of the valve or for circuit dampening.

The port restrictor plugs can be ordered separately with the part numbers shown at left.

Ø (mm)	part number
blank	**0144162**
0.6	**0144163**
0.8	**0144033**
1	**0144034**

Ø (mm)	part number
1.2	**0144035**
1.5	**0144036**
1.8	**0144164**
2	**0144165**

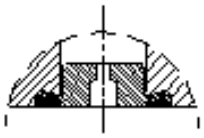

16 - SPARE PARTS FOR DC SOLENOID VALVE

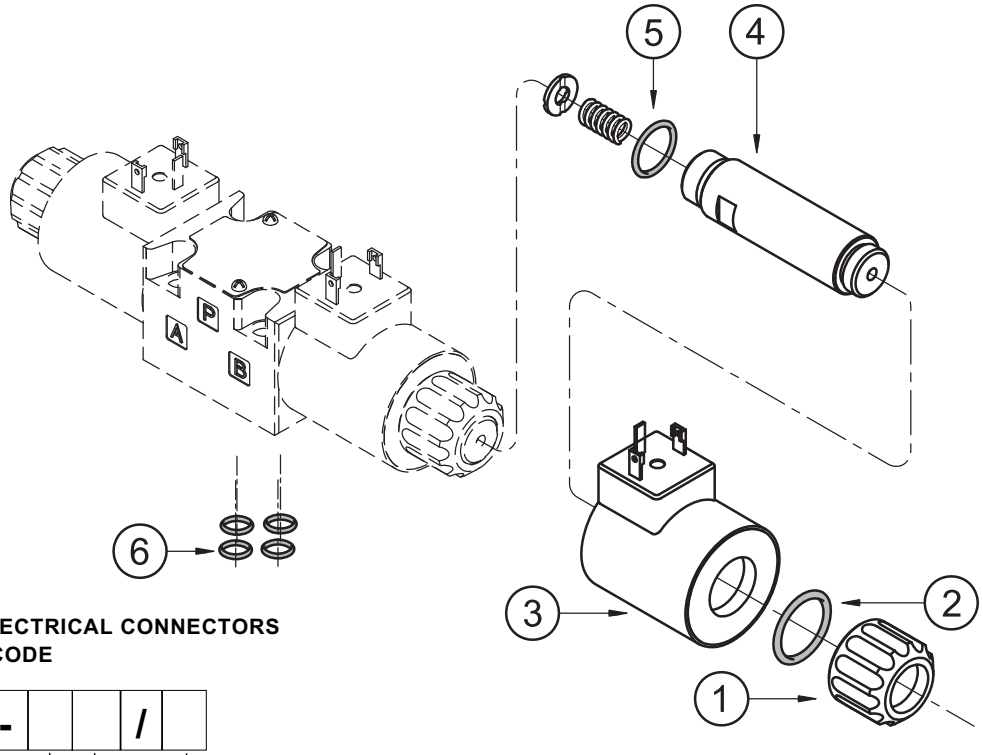

DC COILS AND ELECTRICAL CONNECTORS IDENTIFICATION CODE

C	22S3	-			/	

Supply voltage

D12 = 12 V
D14 = 14 V
D24 = 24 V
D28 = 28 V
D48 = 48 V
D110 = 110 V
D220 = 220 V

Series no.:

10 = for K7

11 = for K1, K2 and K12

(the overall and mounting dimensions remain unchanged from 10 to 19)

Coil electrical connection (see par. 11):

K1 = plug for connector type DIN 43650 (**standard**)

K2 = plug for connector type AMP JUNIOR (available on D12 and D24 coils only)

K7 = plug DEUTSCH DT04-2P for male connector type DEUTSCH DT06-2S (available on D12 and D24 coils only)

K12 = plug for M12 connector
K1 coils and DUAL DIN 43560 connector delivered together

NOTE: the spare part of the connector K12 (DUAL DIN) may be ordered with code 0672136

1	Coil locking ring with seal included cod. 0119412 Tightening torque 5 ±0.5 Nm
2	ORM type 0220-20 (22x2) - 70 Shore
3	Coil (see identification code)
4	Solenoid tube for standard version: TD22-DS3/10N (NBR seals) TD22-DS3/10V (FPM seals) Solenoid tube for version with soft-shifting: TD22-DS3F/10N (NBR seals) TD22-DS3F/10V (FPM seals) **NOTE:** OR n°5 included
5	OR type 2062 (15.6x1.78) - 70 Shore
6	N. 4 OR type 2037 (9.25x1.78) - 90 Shore

SEALS KIT

The codes include the O-Ring n° 2, 5 and 6.

Cod. 1985406 NBR seals
Cod. 1985410 FPM (viton) seals

17 - SPARE PARTS FOR AC SOLENOID VALVE

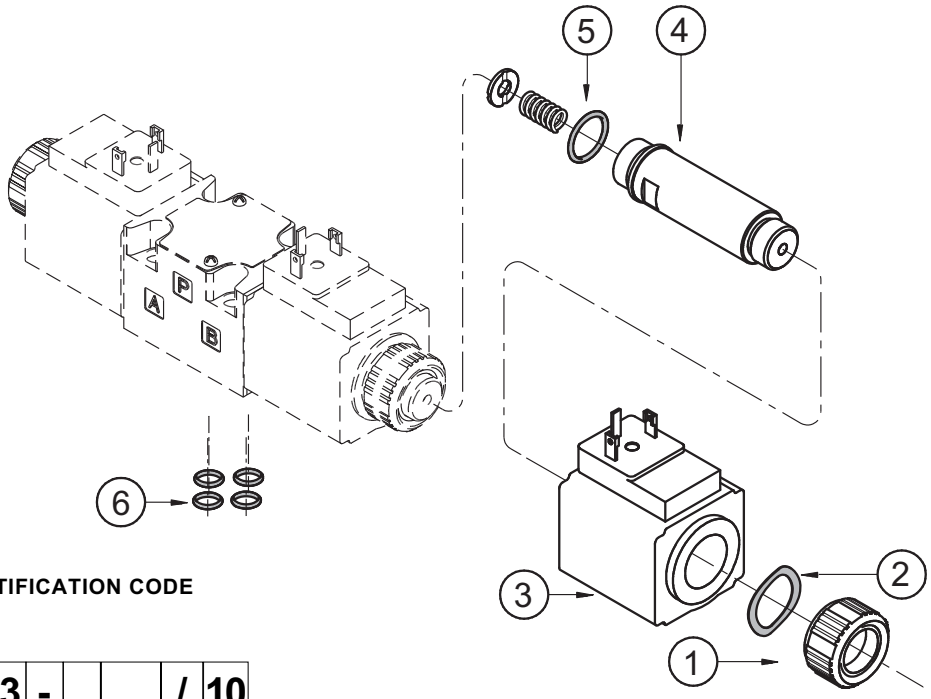

AC COILS IDENTIFICATION CODE

C	20.6S3	-			/	10

Supply voltage

A24 = 24 V - 50 Hz
A48 = 48 V - 50 Hz
A110 = 110 V - 50 Hz
120 V - 60 Hz
A230 = 230 V - 50 Hz
240 V - 60 Hz
F110 = 110 V - 60 Hz
F220 = 220 V - 60 Hz

K1 = Plug for connector type DIN 43650 (**standard**)
K12 = plug for M12 connector K1 coils and DUAL DIN 43560 connector delivered together

Series no.:
(the overall and mounting dimensions remain unchanged from 10 to 19)

1	Coil locking ring cod. 0119333 Tightening torque 5 ±0.5 Nm
2	Snap ring cod. 0550483
3	Coil (see identification code on the side)
4	Solenoid tube : TA20.6-DS3/10N (NBR seals) TA20.6-DS3/10V (FPM seals) **NOTE**: OR n° 5 included
5	OR type 2062 (15.6x1.78) - 70 Shore
6	N. 4 OR type 2037 (9.25x1.78) - 90 Shore

NOTE: the spare part of the connector K12 (DUAL DIN) may be ordered with code 0672136

SEALS KIT

The codes include the OR nr. 5 and 6.

Cod. 1985406 NBR seals
Cod. 1985410 FPM (viton) seals

18 - VALVE FASTENING BOLTS

4 fastening bolts SHC M5x30
Tightening torque 5 Nm (bolts A 8.8)

19 - SUBPLATES (See catalogue 51 000)

Type PMMD-AI3G with rear ports 3/8” BSP
Type PMMD-AL3G with side ports 3/8” BSP

DUPLOMATIC OLEODINAMICA

DUPLOMATIC OLEODINAMICA S.p.A.
20015 PARABIAGO (MI) • Via M. Re Depaolini 24
Tel. +39 0331.895.111
Fax +39 0331.895.339
www.duplomatic.com • e-mail: sales.exp@duplomatic.com

REPRODUCTION IS FORBIDDEN.
THE COMPANY RESERVES THE RIGHT TO APPLY ANY MODIFICATIONS.